FORUM®
ENERGY TECHNOLOGIES

Production Products

Product Photos 3
Injection Tee 4
O-Ring Union 6
"Y" Strainer 8
Gravity Ball Check 10
In-Line Choke 12
In-Line Check Valve 19
Injection Assemblies 21


BAKER

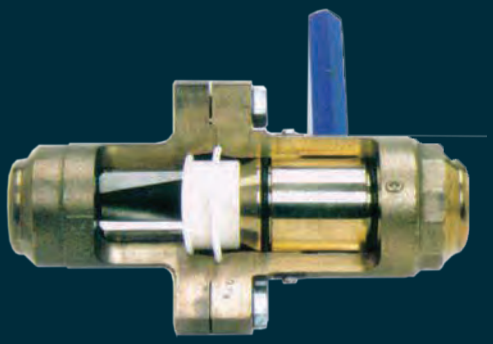

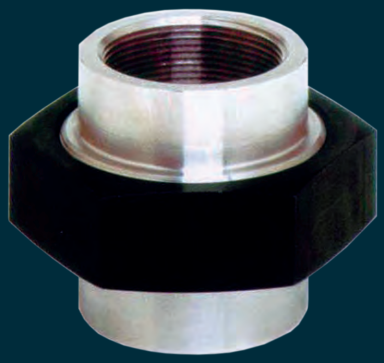

Injection Tee

Introduction

The Injection Tee is designed for water or CO2 injection. The bottom threads directly into a master valve and the top thread allows the use of a nipple and swab valve. The tee is full bore and has an FNPT inlet that accepts the Forum Gravity Ball Check or the Forum In-Line Check Valve. The bonnet cap is tapped for a 1/2″ NPT gauge or needle valve.

Sizes

2-3/8″ x 1-1/2″ or 2-3/8″ x 2″
2-7/8″ x 1-1/2″ or 2-7/8″ x 2″

Connections

Inlet:	FNPT
Outlet:	EUE Pin

Materials

Body:	ASTM B148 Grade 955D Aluminum Bronze or CF8M (316) Stainless Steel
O-Ring:	90 Durometer A Peroxide Cured Nitrile

Pressure Ratings

ANSI 600	1480 psi Working Pressure	2225 psi Test Pressure
ANSI 900/1500	3705 psi Working Pressure	5575 psi Test Pressure

Product Number Scheme

BASE PART NUMBER
1st to 3rd Digits

9 4 1

OUTLET CONNECTIONS
6th Digit

EUE Pin	2

INTLET SIDE CONNECTIONS
8th Digit

FNPT	0

XXX XX X X X X

SIZE PIN
4th & 5th Digit

2-3/8″	23
2-7/8″	27

INLET SIZE
7th Digit

1-1/2″	23
2″	27

BODY MATERIAL
9th Digit

ASTM B148 Grade 955D Aluminum Bronze	2
ASTM B351 CF8M (316) Stainless Steel	3

Description	Dim A	Dim B	Dim C	Dim D	Inlet Dim	Outlet Dim	W.P. (psi)	Temp (°F) Rating
2-3/8″ Injection Tee	4-7/16″	2-3/4″	4-9/16″	8-5/16″	1-1/2″ NPT 2″ NPT	2-3/8″ EUE	3,705	-20°F to +250°F
2-7/8″ Injection Tee	5-1/8″	2-3/4″	4-7/16″	9-9/16″	1-1/2″ NPT 2″ NPT	2-73/8″ EUE	3,705	-20°F to +250°F

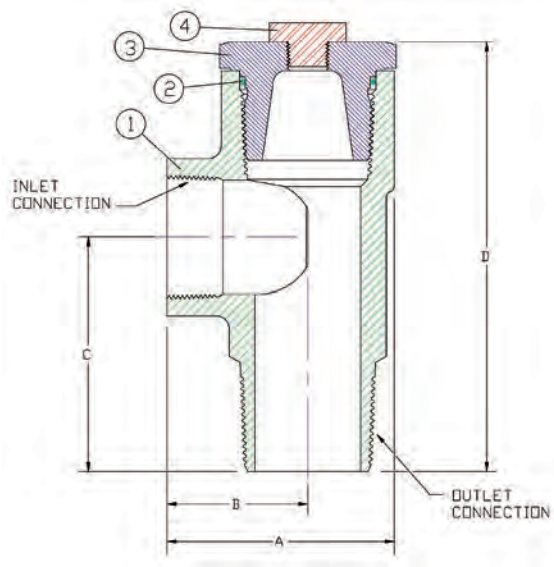

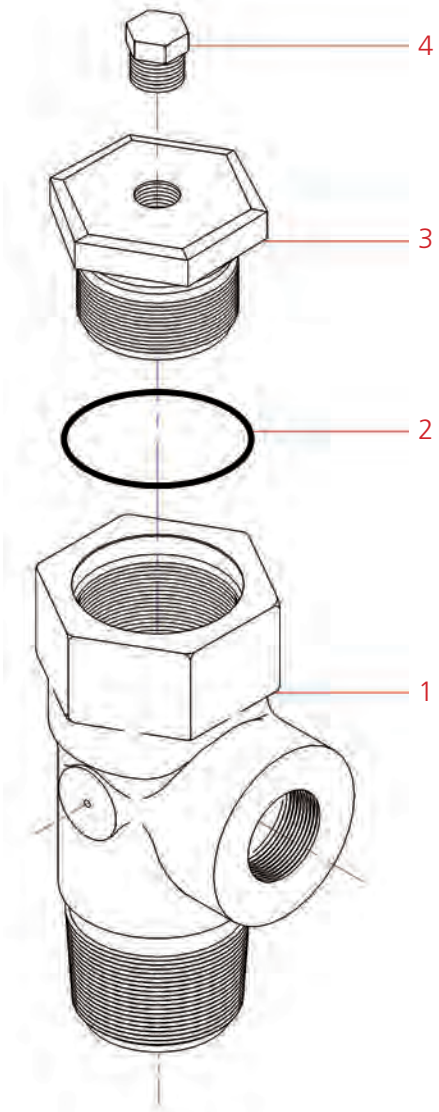

Parts & Weights

	Description		2-3/8″ x 1-1/2″	2-3/8″ x 2″
1	Body	Aluminum Bronze	051936260 10 lbs	051943660 7 lbs
		Stainless Steel	051936280 11 lbs	051943680 8 lbs
2	O-Ring	90 DPC Nitrile	WWB229P40 0.1 lbs	WWB229P40 0.1 lbs
3	Bonnet	Aluminum Bronze	051936360 3 lbs	051943360 3 lbs
		Stainless Steel	051936380 3 lbs	051943380 3 lbs
4	Pipe Plug	1/2″	051936260 1 lbs	051943660 1 lbs

	Description		2-7/8″ x 1-1/2″	2-7/8″ x 2″
1	Body	Aluminum Bronze	051945260 18 lbs	051945360 13 lbs
		Stainless Steel	O/A	O/A
2	O-Ring	90 DPC Nitrile	WWB336P40 0.1 lbs	WWB336P40 0.1 lbs
3	Bonnet	Aluminum Bronze	051945460 4 lbs	051945460 4 lbs
		Stainless Steel	O/A	O/A
4	Pipe Plug	1/2″	WWS110HSS 1 lbs	WWS110HSS 1 lbs

O-Ring Union

Introduction

The Forum O-Ring Union is used for ease of constructing injection assemblies and removing or changing out any part of an assembly without dismantling the entire installation.

Sizes

1", 1-1/2" and 2"

Connection

FNPT or Socket Weld

Materials

Body:	316 Stainless Steel or 316 L Stainless Steel
O-Ring:	90 Durometer A Peroxide Cured Nitrile
Nut:	Steel with QPQ Coating

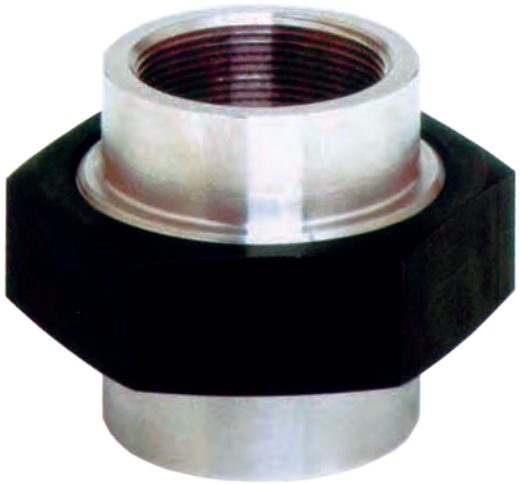

Maximum Working Pressure

3705 psi Working Pressure

Product Number Scheme

BASE PART NUMBER
1st to 5th Digits

9 4 5 0 1

XXX

SIZE
6th & 7th Digit

1"	10
1-1/2"	14
2"	20

XX

END CONNECTIONS
8th Digit

FNPT	0
Socket Weld x FNPT	3
Socket Weld	4

X

BODY MATERIAL
9th Digit

316 Stainless Steel	3
316 L Stainless Steel	4

Description	Dim A	Dim B	W.P. (psi)	Temp (°F) Rating
1″ NPT	2-5/8″	2-1/2″	3,705	-20°F to +250°F
1-1/2″ NPT	3″	3-1/2″	3,705	-20°F to +250°F
2″ NPT	3-13/32″	4″	3,705	-20°F to +250°F

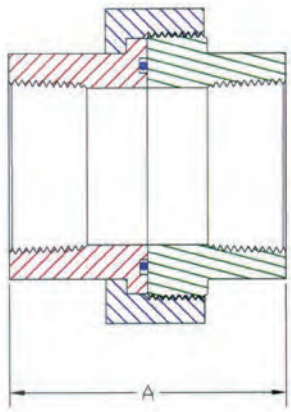

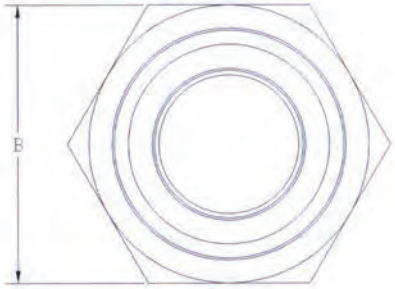

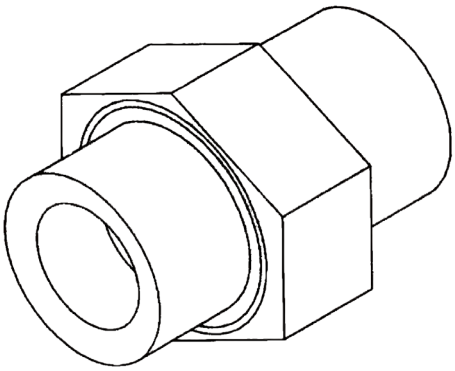

Parts & Weights

	Description		1″	1-1/2″	2″
1	Body	316 SS	051939808 1 lbs	051940108 2 lbs	051940108 2 lbs
		316 L SS FNPT	051939809 1 lbs	051940109 2 lbs	051940109 2 lbs
		316 LSS Socket Weld	051974009 1 lbs	O/A	O/A
2	O-Ring	90 DPC Nitrile	051940000 1 lbs	051940300 2 lbs	051940600 2 lbs
3	Bonnet	316 SS	051939908 1 lbs	051940208 1 lbs	051940508 1 lbs
		316 L SS FNPT	051939909 1 lbs	051940209 1 lbs	051940509 1 lbs
		316 LSS Socket Weld	051974009 1 lbs	O/A	O/A
4	Pipe Plug	1/2″	WWB125P40 0.1 lbs	WWB226P40 0.1 lbs	WWB230P40 0.1 lbs

O/A - On Application

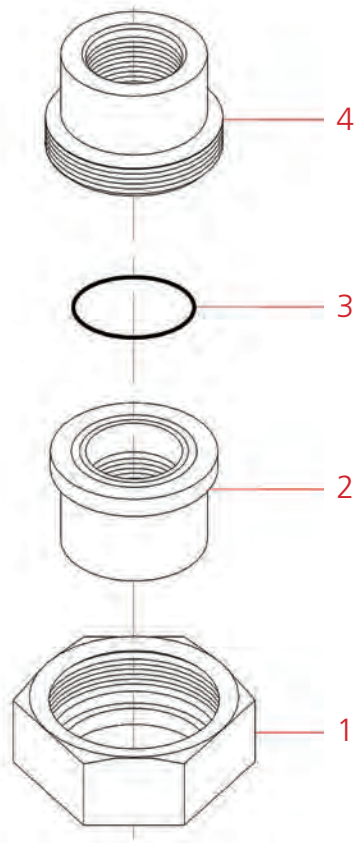

"Y" Strainer

Introduction

The Forum "Y" Strainer is designed for waterflood injection with emphasis on easy removal of working fluid debris. Installed upstream of the flow meter, debris is trapped in a filter screen and can be removed through an easy-access blow-down port in the "Y" strainer body. The cap threads are sealed with an o-ring so they are non-wetted.

Sizes

1" and 2"

Connection

FNPT
Socket Weld
ANSI 900/1500 RTJ (Ring Type Joint) Flanged End
ANSI 900/1500 RF (Raised Face) Flanged End

Materials

Body:	ASTM B148 Grade 955D Aluminum Bronze or CF8M (316 L) Stainless Steel
Strainer Screens:	316 Stainless Steel 1" has .045" diameter holes, 225 per square inch and is 36% open 2" has .063" diameter holes, 144 per square inch and is 45% open
O-Rings:	90 Durometer A Peroxide Cured Nitrile

Maximum Working Pressure

ANSI 900 2220 psi	Working Pressure 3350 psi	Test Pressure
ANSI 1500 3705 psi	Working Pressure 5575 psi	Test Pressure

Assembly Product Number Scheme

BASE PART NUMBER
1st to 3rd Digits

9 4 6

CLASS
6th Digit

Threaded	0
ANSI 900	1
ANSI 1500	2

SCREEN MATERIAL
8th Digit

316 SS	0

XXX XX X X X X

SIZE
4th & 5th Digit

1"	10
2"	20

INLET SIZE
7th Digit

FNPT	0
RTJ Flanged	3
RT Flanged	4
Socket Weld	5

BODY MATERIAL
9th Digit

Aluminum Bronze	2
CF8M (316) SS	3
CF3M (316 L) SS	4

Description	Connection	Dim A	Dim B	Dim D	Inlet Dim	Outlet Dim	W.P. (psi)	Temp (°F) Rating
1″ Y-Strainer	NPT RF/RTJ	4-7/8″ 10″	6-1/2″	1/2″	1″ NPT or RF/RTJ	1″ NPT or RF/RTJ	3,705	-20°F to +250°F
2″ Y-Strainer	NPT RF/RTJ	8″ 13″	6-1/4″	1/2″	2″ NPT or RF/RTJ	2″ NPT or RF/RTJ	3,705	-20°F to +250°F

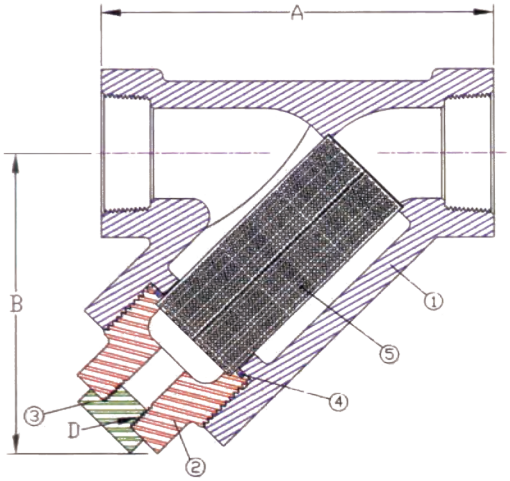

Strainer - Screen Info		
Description	# Holes/In	% Open
1″ Y-Strainer	225	36
2″ Y-Strainer	144	45

Parts & Weights

Description			1″	2″
1 Body FMPT End				
	Aluminum Bronze		051934660 7 lbs	051945560 17 lbs
	Stainless Steel		051934680 8 lbs	051945580 18 lbs
Flanged End	Aluminum Bronze	RF	N/A	051948060 26 lbs
		RTJ	N/A	051947960 26 lbs
	Stainless Steel	RF	051967780 12 lbs	051947960 28 lbs
		RTF	O/A	051947980 28 lbs
Socket Weld	316 L Stainless Steel		051958581 9 lbs	O/A
2 Bonnet	Aluminum Bronze		051934760 2 lbs	051945760 3 lbs
	Stainless Steel		051934780 2 lbs	051945780 3 lbs
3 Pipe Plug1/2″			WWS110HSS 1 lbs	WWS110HSS 1 lbs
4 O-Ring	90 DPC Nitrile		WWB223P40 0.1 lbs	WWB228P40 0.1 lbs
5 Screen	316 Stainless Steel		051934808 1 lbs	051945608 1 lbs

N/A - Not Available; O/A - On Application

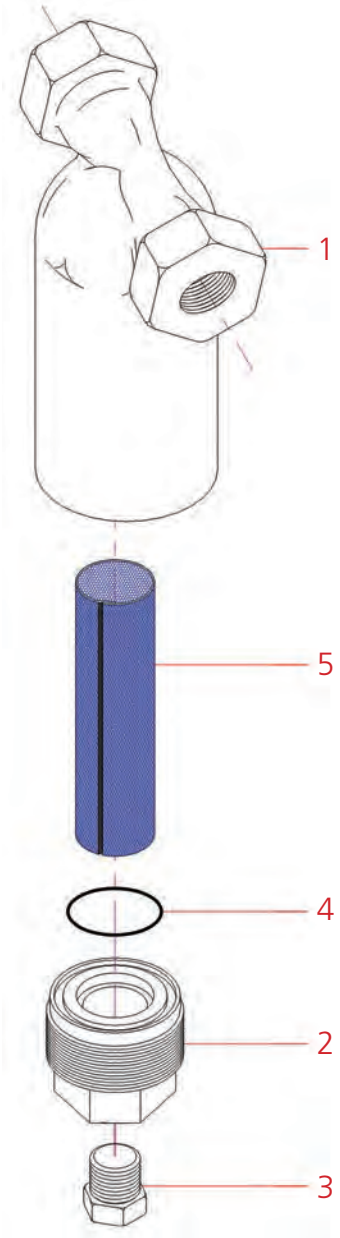

Gravity Ball Check

Introduction

The Forum Gravity Ball Check is designed for waterflood injection. The valve stops flow from the tubing if the pressure is higher than the injection line. The Delrin cage prevents the ball from contacting the body for long life. The ball and cage can be replaced while inline. The cap threads are not subjected to the line flow or corrosion because they are sealed by an o-ring.

Sizes

1″ and 2″

Note: The ball check size is dictated by the amount of fluid to be injected, usually the same size as the turbine meter.

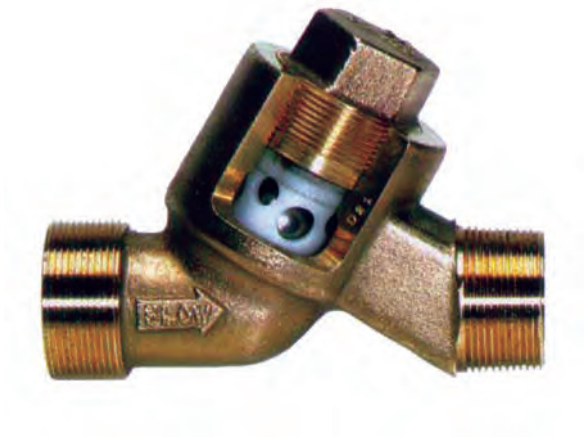

Connection

Inlet:	MNPT
	FNPT Union
	Socket Weld Union
	MNPT (Union and Nipple)
Outlet:	MNPT

Materials

Body and Bonnet:	ASTM B148 Grade 955D Aluminum Bronze or
	ASTM A351 CF8M (316) Stainless Steel
Cage:	Delrin
Ball:	Standard: 440 Stainless Steel
	*Optional: 316 or 329 Stainless Steel
Union:	316 L Stainless Steel
O-Ring:	90 Durometer A Peroxide Cured Nitrile
Union Nut:	Steel with QPQ Coating

*Trim for corrosive service

Pressure Rating

3705 psi Working Pressure 5575 psi Test Pressure

Assembly Product Number Scheme

BASE PART NUMBER 1st to 3rd Digits	INLET SIZE 4th Digit	INLET CONNECTION 5th Digit	OUTLET SIZE 6th Digit	OUTLET CONNECTION 7th Digit	CLASS/BALL MATERIAL 8th Digit	BODY MATERIAL 9th Digit
9 4 7	1″ 1 2″ 3	MNPT 0 Socket Weld Union 1 FNPT Union 8	1-1/2″ 2 2″ 3	MNPT 0	Threaded / 440C Stainless Steel 0 Threaded / 316 or 329 Stainless Steel 1	ASTM B148 Grade 955D Aluminum Braonze 2 ASTM A351 CF8M (316) Stainless Steel 3
XXX	X	X	X	X	X	X

Gravity Ball Check

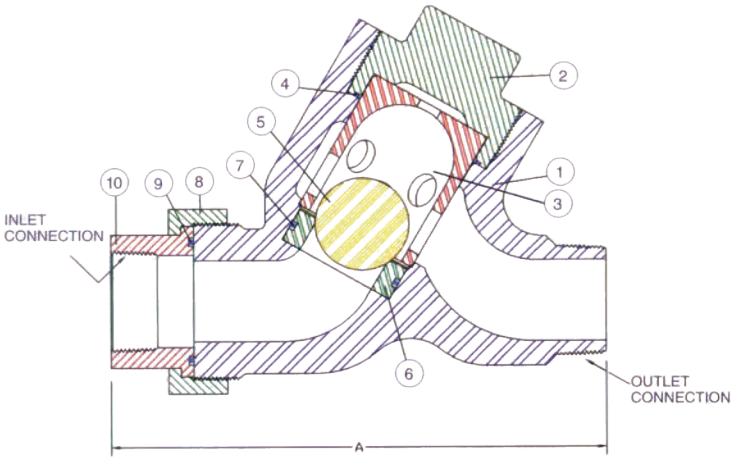

Description	Dim A	Inlet Dim	Outlet Dim	W.P. (psi)	Temp (°F) Rating
1″ Gravity Ball Check	7-11/16″	1″ NPT	1-1/2″ NPT	3,705	-20°F to +250°F
2″ Gravity Ball Check	10-1/2″	2″ NPT	2″ NPT	3,705	-20°F to +250°F

Parts & Weights

	Description		1″	2″
1	Body FMPT Union x MNPT	Aluminum Bronze	051944060 5 lb	051944160 16 lb
		Stainless Steel	O/A	O/A
	MNPT Pin (Union Nipple) x MNPT	Aluminum Bronze	O/A	051946360 16 lb
		316 L Stainless Steel	O/A	O/A
2	Bonnet	Aluminum Bronze	051935860 1 lb	051946460 4 lb
		Stainless Steel	O/A	O/A
3	Cage	Delrin	051935900 1 lb	051946500 4 lb
4	O-Ring	90 DPC Nitrile	WWB223P40 0. 1 lb	WWB150P40 0.1 lb
5	Ball	440 Stainless Steel	051936001 1 lb	051946601 2 lb
		316/329 Stainless Steel	051936000 1 lb	051946600 2 lb
6	Ball Seat		051936100 1 lb	051946700 2 lb
7	O-Ring	90 DPC	WWB216P40 0.1 lb	WWB229P40 0.1 lb
8	Union Nut Steel with QPQ Coating		051940000 1 lb	051940600 1 lb
9	O-Ring	90 DPC Nitrile	WWB125P40 0.1 lb	WWB150P40 0.1 lb
10	Adapter	316 SS NPT Socket Wels 316 L SS	8 9	05193990X 8.5 lb	051940508 1.3 lb

O/A - On Application

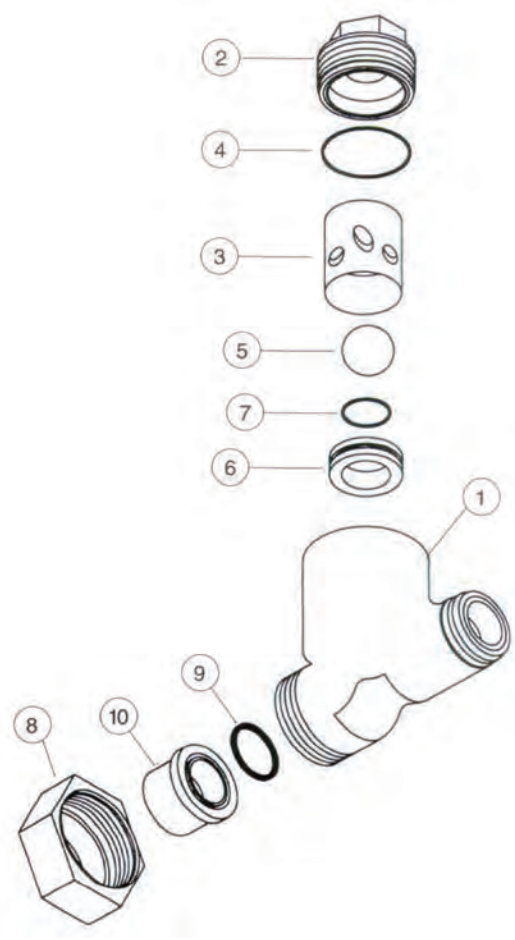

In-Line Choke

Introduction

The Forum In-Line Choke is designed specifically for controlling gas and liquid flowline rates. Water and CO2 systems are designed to control the rate of fluid injection. The stellite sleeve absorbs the cavitation and pitting action of the fluid as it takes the pressure drop. The sleeve design allows the thickest material around the disc holes and is funnel-shaped to direct the flow back into the center of the piping.

Sizes

1″ and 2″

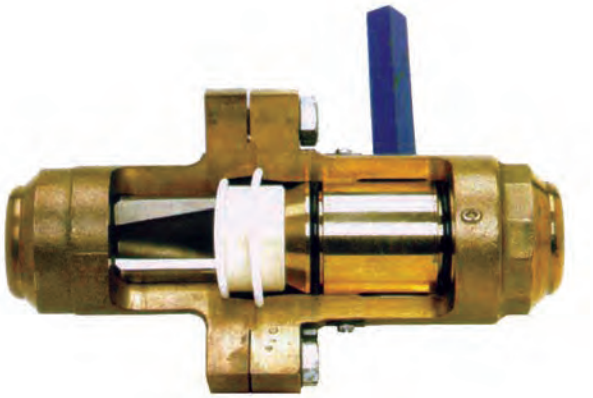

Connection

Threaded
ANSI 600 and 900/1500 Flanged
Union x Socket Weld
Union x Union

Materials

Body:	ASTM A216 WCB Steel or ASTM B148 Aluminum Bronze Grade 955D Alloy or CF8M (316) Stainless Steel or CF8M (316 L) Stainless Steel
Disc:	Ceramic AI2O3 for applications to 400 psi Zirconia ZrO2 for applications above 600 psi
Body Seals:	Type 1, Grade 1 PTFE Fluorocarbon
Rotator Seals:	90 Durometer A Peroxide Cured Nitrile O-Ring with Type 1, Grade PTFE Fluorocarbon Back-up ring
Disc Pins:	Monel
Wearsleeve:	Stellite 6B

Actuation

Available upon request

Pressure Rating

FNPT	3705 psi Working Pressure	5575 psi Test Pressure
ANSI 600	1480 psi Working Pressure	2225 psi Test Pressure
ANSI 900/1500	3705 psi Working Pressure	5575 psi Test Pressure

NOTE: The Top Entry Choke is also available. See you BTE brochure for more details.

Assembly Product Number Scheme

BASE PART NUMBER 1st to 3rd Digits	SIZE 4th Digit	END CONNECTION 5th Digit	HOLE SIZE 6th Digit	DISC MATERIAL 7th Digit	SLEEVE & SEALS MATERIAL 9th Digit	CLASS/BALL MATERIAL 8th Digit
9 4 8	1″ 1 2″ 2	FNPT 0 600 RF 2 600 RTJ 3 900/1500 RF 4 900/1500 RTJ 5 Union x Socket Weld 8	2-1/8″ 1 2-1/4″ 3 2-3/8″ 4 2-1/2″ 5	Ceramic Al O 1 Tungsten Carbide GR Al-C6 8	Stellite w/Nitrile 1 Stellite w/L7 (low temp) bolting w/Nitrile 2 Stellite w/Fluorolastomer 3	Steel 1 Aluminum Bronze 2 CF8M (316) SS 3 CF3M (316 L) SS 5
XXX	X	X	X	X	X	X

Repair Kit Product Number Scheme

BASE PART NUMBER 1st to 7th Digits	SIZE 4th Digit	END CONNECTION 9th Digit
0 5 1 9 4 8 3	1-2 Holes 1/8″ dia. 1 2-2 Holes 1/4″ dia. 1 3-2 Holes 3/8″ dia. 1 4-2 Holes 1/2″ dia. 1 5-2 Holes 5/8″ dia. 1 6-1 Pie 1/8″ dia. (.844) 1 7-1 Pie 1/8″ dia. (.953) 1	Ceramic 99% $A1_2 0_3$ 1 Tungsten Carbide GR A1-C6 8
XXXXXXX	X	X

In-Line Choke

Flow Chart

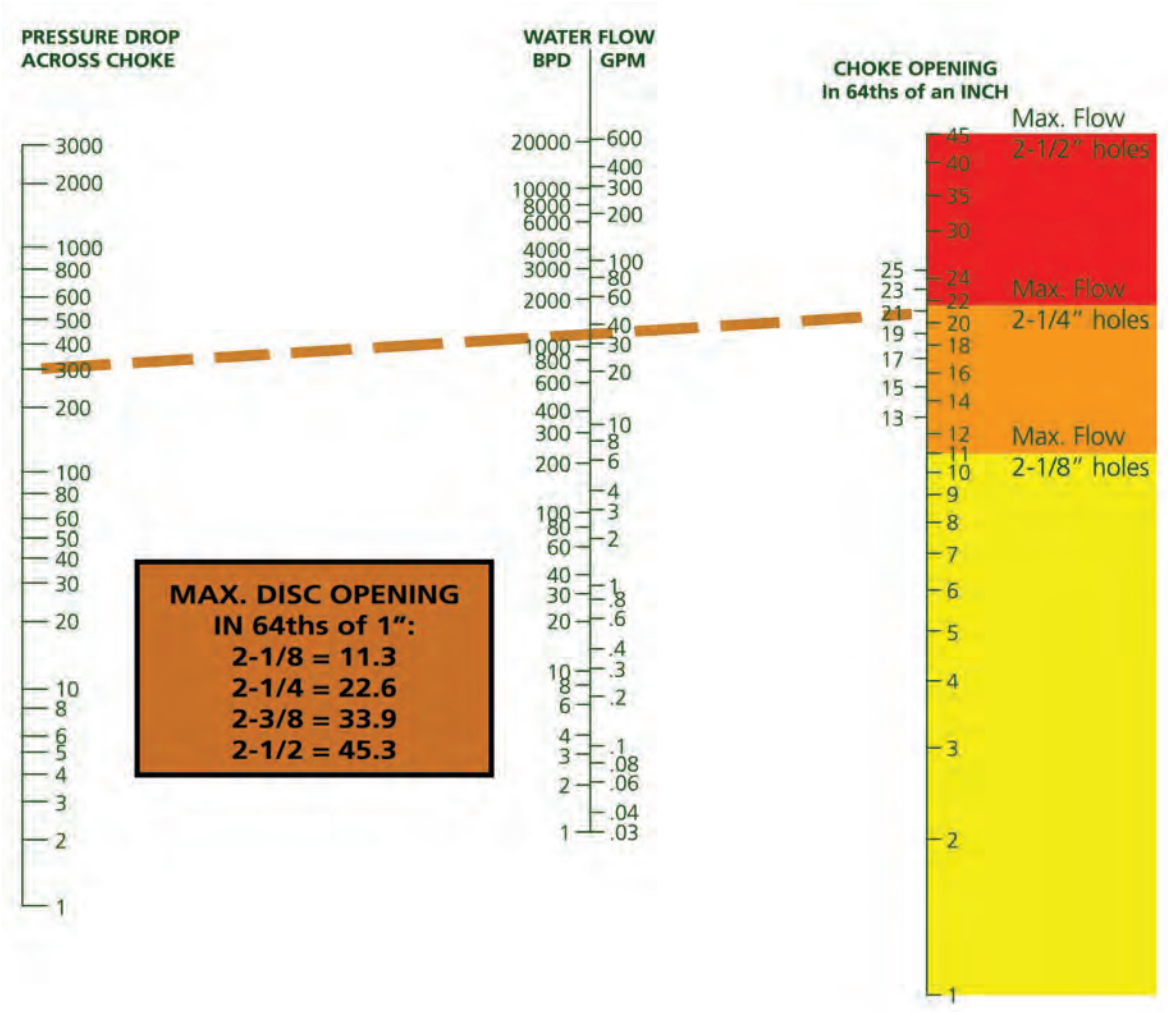

DIRECTIONS: Use a straight edge and select estimated pressure drop and desired flow. Read the Choke Opening in 64th of an inch. Specify the smallest Disc Opening that will handle the flow.

EXAMPLE: 35 GPM or 1200 BPD at 300 P is 21/64; use disc with 2-1/4" holes.

FOR MAXIMUM CHOKE LIFE USE THE SMALLEST DISC THAT WILL FLOW THE REQUIRED AMOUNT OF FLUID.

In-Line Choke - Treaded & Union End

Item	Description
1	Body
2	O-Ring
3	Back-up Ring
4	Dowel Pins
5	Cap Screw (2)
6	O-Ring
7	Outlet Hub
9	O-Ring
11	Disc (2)
12	Calibration Band **
13	Screws **
14	Handle
15	Indicator
16	Rotator
17	Lube Fitting **
18	Wear Sleeve
19	O-Ring (2)
20	Union Adapter (2)
21	Union Nut (2)

** Not Shown

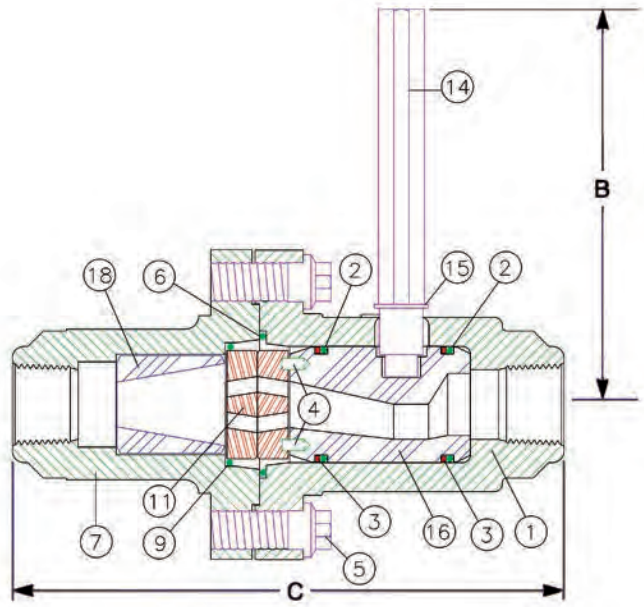

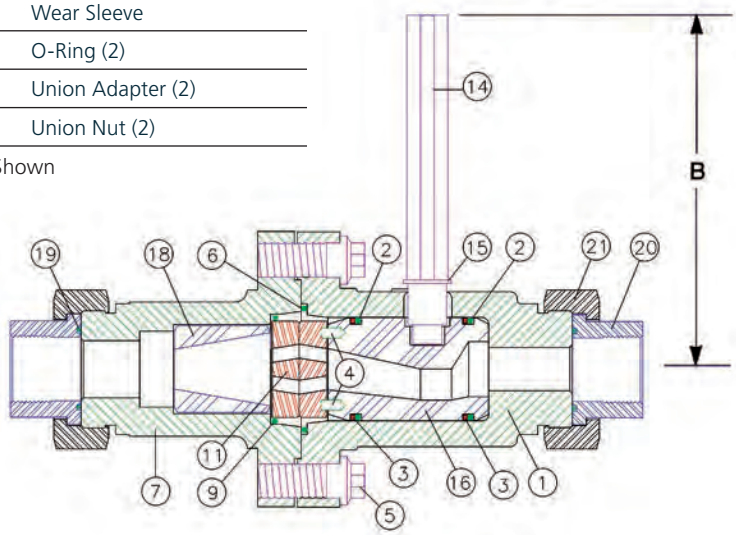

Description	Dim A	Dim B	Dim C	Connection	W.P. (psi)	Temp (°F) Rating
1″ In-Line Choke	11-7/16″	6-9/16″	8-7/8″	NPT	3,705	-20°F to +250°F
2″ In-Line Choke	12-9/16″	6-9/16″	10″	NPT	3,705	-20°F to +250°F

In-Line Choke - Flanged End

Item	Description
1	Body
2	O-Ring
3	Back-up Ring
4	Dowel Pins, Disc
5	Cap Screw (2)
6	O-Ring
7	Outlet Hub
9	O-Ring
11	Disc (2)
12	Calibration Band
13	Screws **
14	Handle
15	Indicator
16	Rotator
17	Lube Fitting **
18	Wear Sleeve

** Not Shown

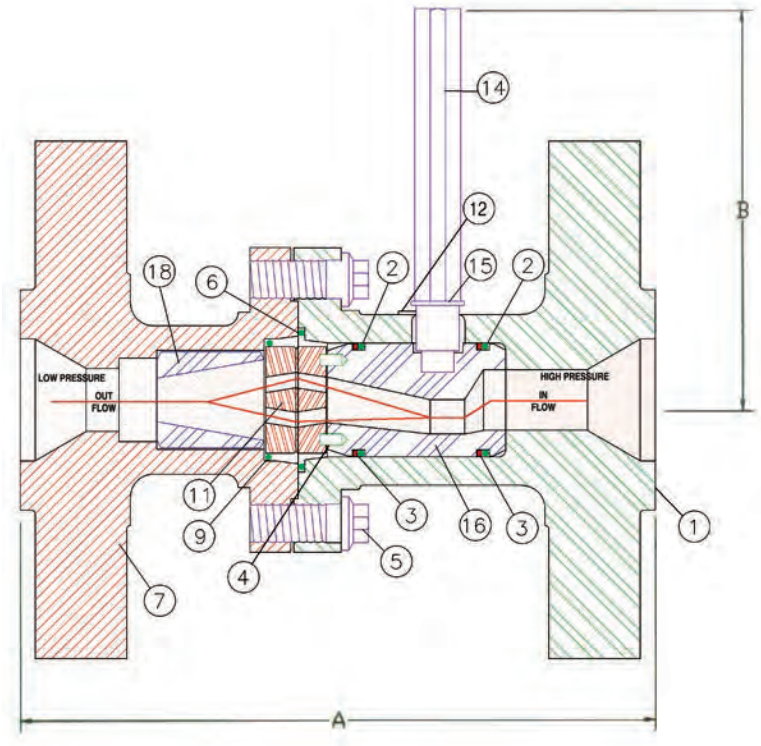

Description	Dim A	Dim B	Connection	W.P. (psi)	Temp (°F) Rating
1″ In-Line Choke	10-1/2″	6-9/16″	400/600 RF 900/1500 RF	1,480 3,705	-20°F to +250°F
2″ In-Line Choke	10-5/8″	6-9/16″	400/600 RTJ 900/1500 RTJ	1,480 3,705	-20°F to +250°F

In-Line Choke - Parts Illustration

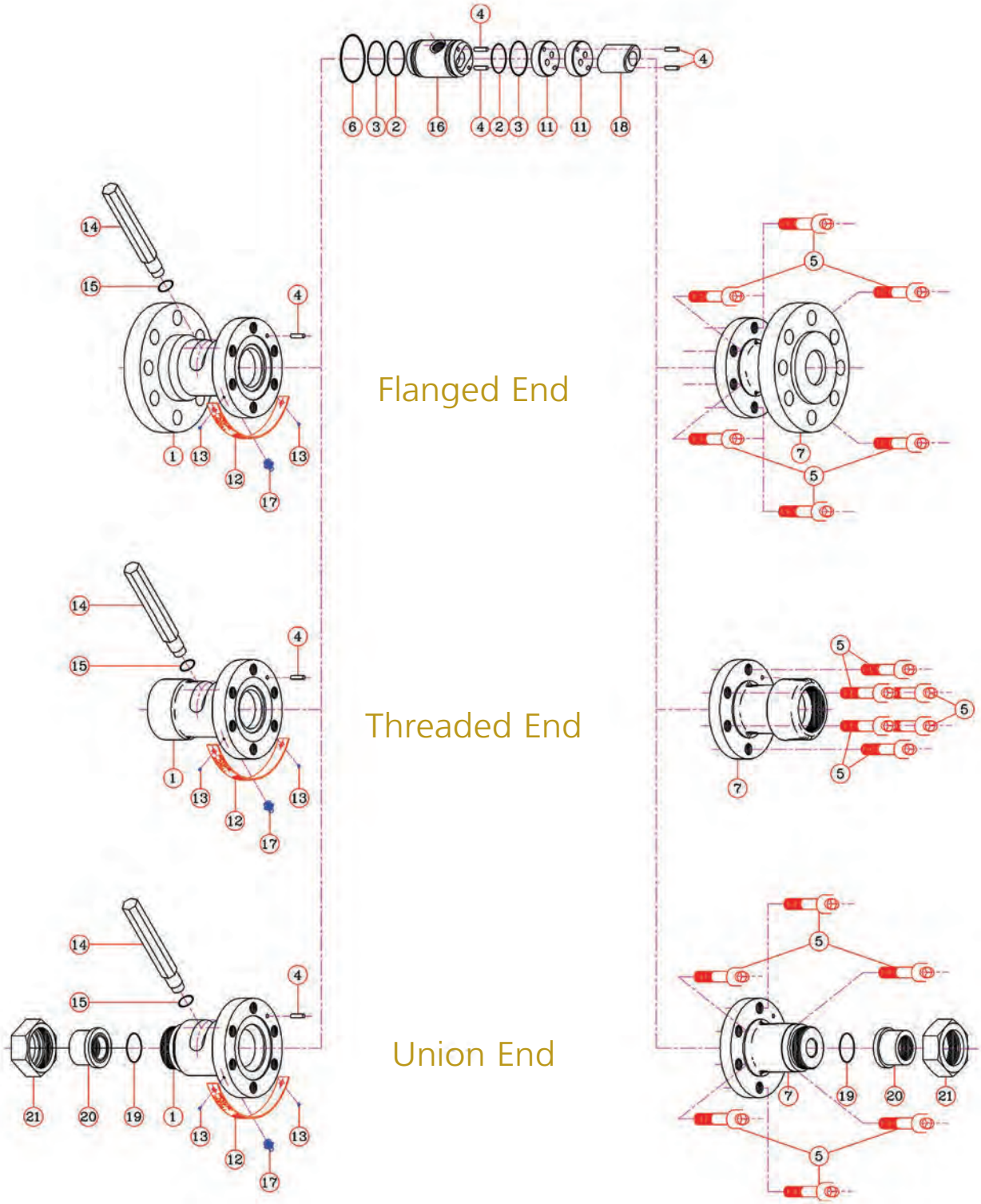

Parts & Weights

	Description			1"	2"
1	Body				
	Threaded	Steel	2	0519371X0	0519373X0
		Aluminum Bronze	6	7 lb	8 lb
		Stainless Steel	8		
	Union End	Steel	2	0519372X0	O/A
		Aluminum Bronze	6	8 lb	
		Stainless Steel	8		
	Flanged				
	RF ANSI 600	Steel	2	O/A	0519374X0
		Aluminum Bronze	6		12 lb
		Stainless Steel	8		
	RTJ ANSI 600	Steel	2	O/A	0519460X0
		Aluminum Bronze	6		12 lb
		Stainless Steel	8		
	RF ANSI 1500	Steel	2	O/A	0519375X0
		Aluminum Bronze	6		20 lb
		Stainless Steel	8		
	RTJ ANSI 1500	Steel	2	O/A	0519458X0
		Aluminum Bronze	6		20 lb
		Stainless Steel	8		
2	O-Ring	90 DPC Nitrile		WWB223P40	WWB223P40
				0.1 lb	0.1 lb
3	Back-up Ring	Teflon®		WWD223T10	WWD223T10
				0.1 lb	0.1 lb
4	Dowel Pin	Monel		WWLA060HH	WWLA060HH
				0.1 lb	0.1 lb
5	Cap Screw			WWG31H1H6	WWG31H1H6
				0.1 lb	0.1 lb
6	O-Ring	Teflon®		WWB227T10	WWB227T10
				0.1 lb	0.1 lb
7	Hub Assembly				
	Threaded	Steel	2	0519379X1	0519381X1
		Aluminum Bronze	6	7 lb	8 lb
		Stainless Steel	8		
	Union End	Steel	2	0519380X1	O/A
		Aluminum Bronze	6		
		Stainless Steel	8	O/A	0519376X1
	Flanged				12 lb
	RF ANSI 600	Steel	2	O/A	0519461X1
		Aluminum Bronze	6		12 lb
		Stainless Steel	8		
	RTJ ANSI 600	Steel	2	O/A	0519377X1
		Aluminum Bronze	6		20 lb
		Stainless Steel	8		
	RF ANSI 1500	Steel	2		0519459X1
		Aluminum Bronze	6		20 lb
		Stainless Steel	8		
	RTJ ANSI 1500	Steel	2		
		Aluminum Bronze	6		
		Stainless Steel	8		
9	O-Ring			WWB224T10	WWB224T10
				0.1 lb	0.1 lb

	Description				1"	2"
10	Disc					
		Ceramic	.125	1/8"	051938322	051938322
					0.3 oz	0.3 oz
			.250	1/4"	051938324	051938324
					0.3 oz	0.3 oz
			.375	3/8"	051938326	051938326
					0.3 oz	0.3 oz
			.500	1/2"	051938328	051938328
					0.3 oz	0.3 oz
		Tungsten Carbide	.125	1/8"	051938342	051938342
					0.3 oz	0.3 oz
			.250	1/4"	051938344	051938344
					0.3 oz	0.3 oz
			.375	3/8"	051938346	051938346
					0.3 oz	0.3 oz
			.500	1/2"	051938348	051938348
					0.3 oz	0.3 oz
12	Calibration Band		.125	1/8"	051938402	051938402
					0.3 oz	0.3 oz
			.250	1/4"	051938404	051938404
					0.3 oz	0.3 oz
			.375	3/8"	051938406	051938406
					0.3 oz	0.3 oz
			.500	1/2"	051938408	051938408
					0.3 oz	0.3 oz
13	Screw				WWGG0618F	WWGG0618F
					0.3 oz	0.3 oz
14	Handle				051938500	051938500
					1 lb	1 lb
15	Indicator	Truarc Ring			WWC510075	WWC510075
					0.1 oz	0.1 oz
16	Rotator	Steel		2	0519386X0	0519386X0
		Aluminum Bronze		6	2 lb	2 lb
		Stainless Steel		8		
17	Lube Fitting				WWW00C000	WWW00C000
					1 lb	1 lb
18	Wear Sleeve				W51938201	W51938201
					1 lb	1 lb
19	O-Ring	90 DPC			WWB125P40	WWB125P40
					0.1 lb	0.1 lb
20	Union Adapter	316 SS		8		
		316 L SS NPT		9	05193990X	05193990X
					1 lb	1 lb
		316 L SS Socket Weld			051957909	O/A
					1 lb	
21	Union Nut	Steel with QPQ Coating			051940000	051940600
					1 lb	2 lb

O/A - On Application

Note: Redress Kit for 1" and 2" On-Line Chokes; P/N 051948400; Contains: Items 2, 3, 6 & 9
Redress Kit for 1" and 2" On-Line Chokes; P/N 0519483XX; Contains: Items 2, 3, 6, 9 & 11

In-Line Check Valve

Introduction

The Forum In-Line Check Valve is an economical design for use with our Forum Injection Tee. The valve stops flow from the tubing if the tubing pressure is higher than the injection line. This spring-loaded, center-disc-type check valve has an MNPT outlet that threads into the Injection Tee inlet with an FNPT valve inlet.

Sizes

1-1/2″ x 1″
2″ x 1″

Connection

Inlet: FNPT
Outlet: MNPT

Materials

Bushing: 316 Stainless Steel
Retainer: CF8M (316) Stainless Steel
Spring: 316 Stainless Steel
Disc: 316 Stainless Steel

Maximum Working Pressure

3000 psi Working Pressure

Assembly Product Number Scheme

BASE PART NUMBER 1st to 3rd Digits	INLET CONNECTION 5th Digit	OUTLET CONNECTION 7th Digit	BODY MATERIAL 9th Digit
9 4 9	FNPT 1	MNPT 0	316 Stainless Steel 3

XXX X X X X X

INLET SIZE 4th Digit	OUTLET SIZE 6th Digit	CLASS 8th Digit
1″ 1	1-1/2″ 2 2″ 3	Threaded 0

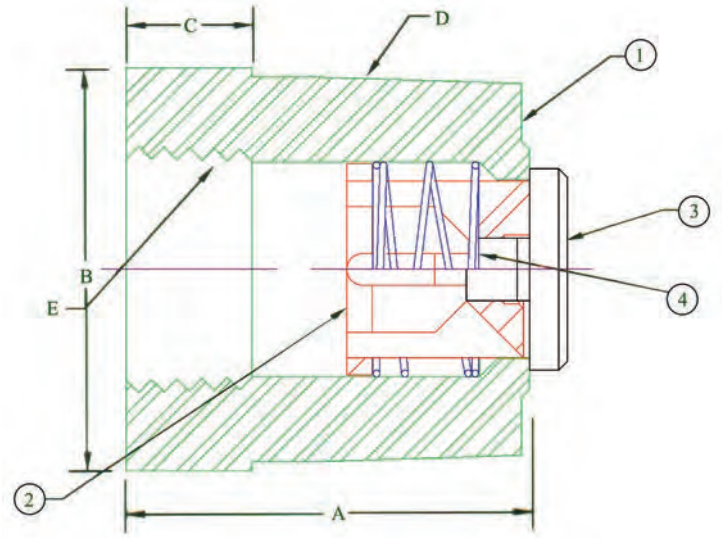

Dimension/Size	1-1/2″ x 1″	2″ x 1″
A	2″	2″
B	2″ Hex	2-1/2″
C	5/8″	5/8″
D	1-1/2″ NPT Pin	2″ NPT Pin
E	1″ NPT Box	1″ NPT Box

Parts & Weights

Dimension	1-1/2″ x 1″	2″ x 1″
1 Bushing 316 Stainless Steel	051951708 1 lb	051974708 2 lb
2 Retainer CF8M (316) Stainless Steel	051951980 0.3 lb	051951980 0.3 lb
3 Disc 316 Stainless Steel	051951808 1 lb	051951808 1 lb
4 Spring 316 Stainless Steel	051952000 0.3 lb	051952000 0.3 lb

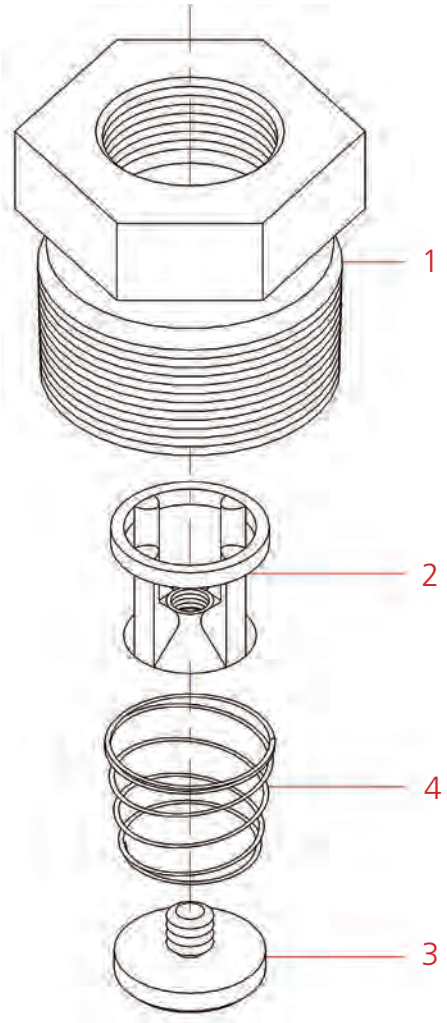

Typical Injection Assemblies

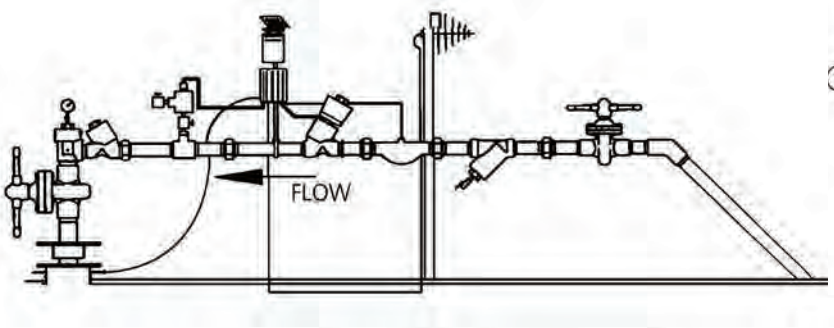

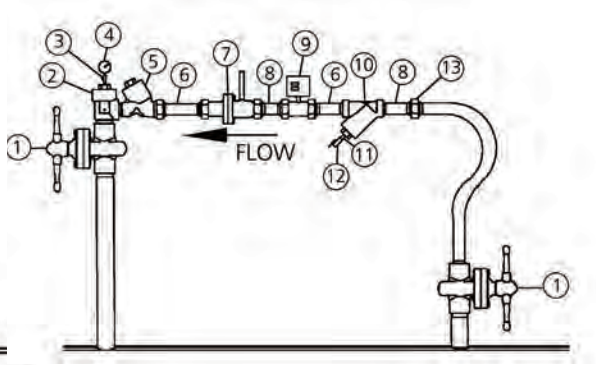

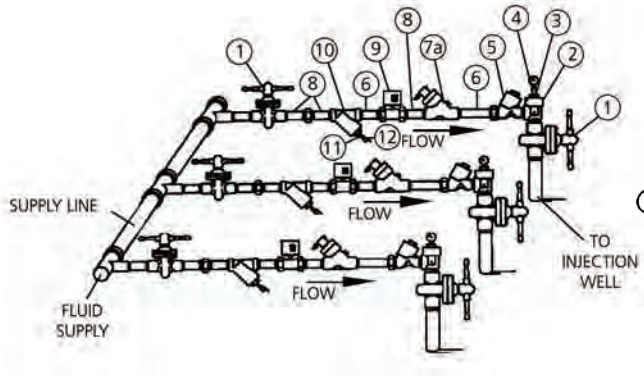

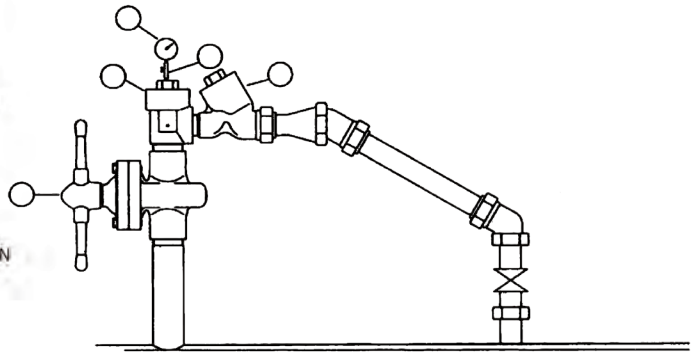

Item	Description
1	EUE BTC Gate Valve
2	EUE Injection TEE
3	Needle Valve
4	Gauge
5	Gravity Ball Check
6	SCH 80 Pipe Nipple
7	In-Line Choke

Item	Description
7a	BTE Forum Top Entry Choke
8	SCH80 Pipe Nipple
9	316 SS Meter, 5000 psi
10	"Y" Strainer
11	SCH80 316SS Pipe Nipple
12	316 SS Ball Valve
13	316 L SS Union

Notes

Drilling Sales Headquarters

10344 Sam Houston Park Drive, Suite 300
Houston, TX 77064
USA
713.351.7900

Regional Offices

Unit 7, Murcar Industrial Estate
Denmore Road, Bridge of Don
Aberdeen AB23 8JW
UK
44.1224.707800

Oilfields Supply Center
Building B-45
Jebel Ali Free Zone
Dubai
UAE
971.4.883.5266

#106, 3903 - 75 Ave
Leduc, Alberta T9E 0K3
Canada
780.980.0345

No 51 Benoi Road #06-00
Singapore 629 908
Singapore
65.6465.4850

Our goal is to become the leading provider of mission critical oilfield products and related services in terms of customer satisfaction, safety and financial performance.

Our experienced management team and employees are dedicated to solving our customers' problems. We invest in long term relationships and cooperate on product development with our clients, we consider them our partners.

Our Core Values

No one gets hurt

The safety of our employees and customers is our first priority coupled with a healthy respect for the environment.

Integrity

In everything we do, in every interaction, both internally and externally, we strive to operate with the utmost integrity and mutual respect.

Customer focused

Our products enhance our customer's performance and we listen to their needs and work with them to solve their challenges.

Good place to work

We are committed to creating a workplace that fosters innovation, teamwork and pride. Every team member is integral to our success and is treated equally and fairly.

FORUM®
ENERGY TECHNOLOGIES

Forum Sales

10344 Sam Houston Park Drive
Suite 300
Houston, TX 77064

ForumDP.Sales@f-e-t.com

713-351-7900

DRL1101.12.2018